POL

DIY Workshop – Polarizer with glitterboard

Raffael Segmüller - © by Seismic Industries

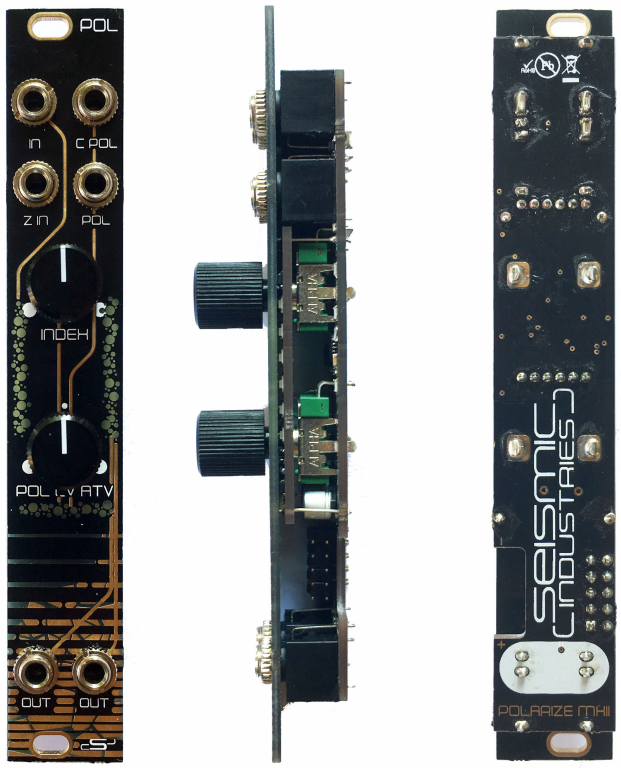

Table of Contents

1 Module Description

The POL is in its heart a multiplier or ringmodulator, with some extras. It can amplify, attenuate, invert and additionally sum signals together, all voltage controlled. It is based on the analog multiplier chip AD633 from ANALOG DEVICES. The module also includes the attenuversion circuit of the previous VIM modue to adjust the incoming POL/C POL voltages in a flexible manner.

It also includes the glitterboard :) which features 3 passive bipolar VU meters on a seperate PCB which is sandwiched between the mainboard and the frontpanel. There is just about enough space to do so :)
This provides realtime visualization of all the present signals.

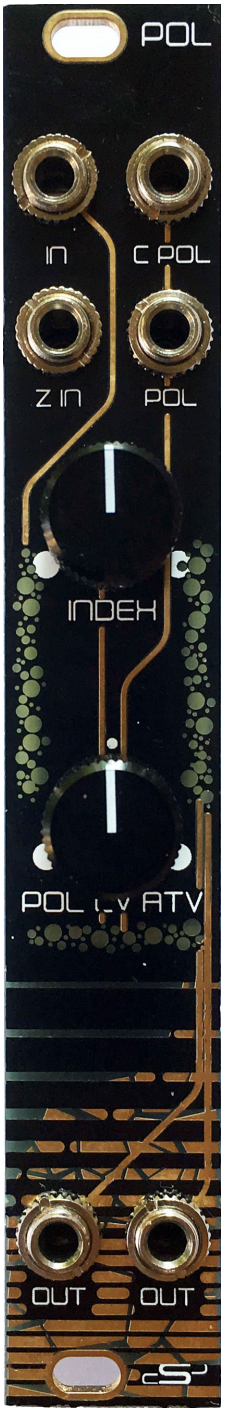

IN is the input for the signal to be processed.

C POL and **POL** are the inputs for the polarizing CV. If the voltage is positive the signal will be amplified/attenuated proportionally, and if its negative it will be additionaly inverted.

Z IN is summed to the product of IN and C POL/ POL.

INDEX sets the initial gain of the multiplier, from -1 to 1. Like an offset gain.

POL CV ATV setting for the incoming polarizing voltage

The bubbles indicate the input/output and polarizing voltage in the module from the glitterboard.

The **OUTs** are the outputs of the module, they are parallel and internaly decoupled by a 600 Ohm resistor.

1.1 Known issues with MKII unit

- **R13** has to be omitted, otherwise the POL ATV signal gain will be asymmetric

- **R5** is to small. Has to be **220k** instead of 100k (otherwise amplification is to low)

- The polarized parts (LED's, Zener Diodes) on the glitterboard corresponding to the POL CV have to be mounted with inverted polarity (otherwise the meter will display inverted)

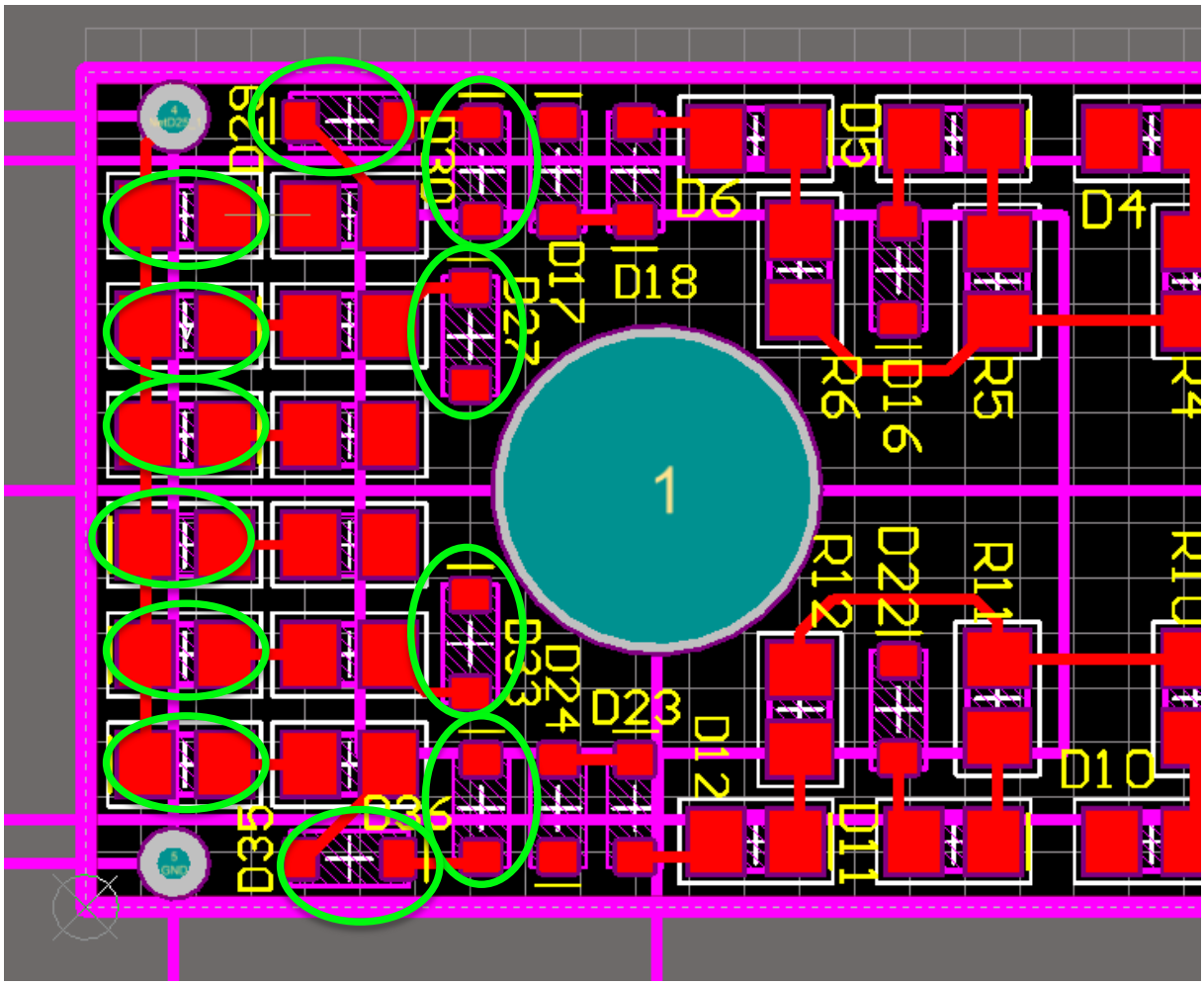

- There is one unrouted track on the glitterboard between R15 and D28, make a solderbridge

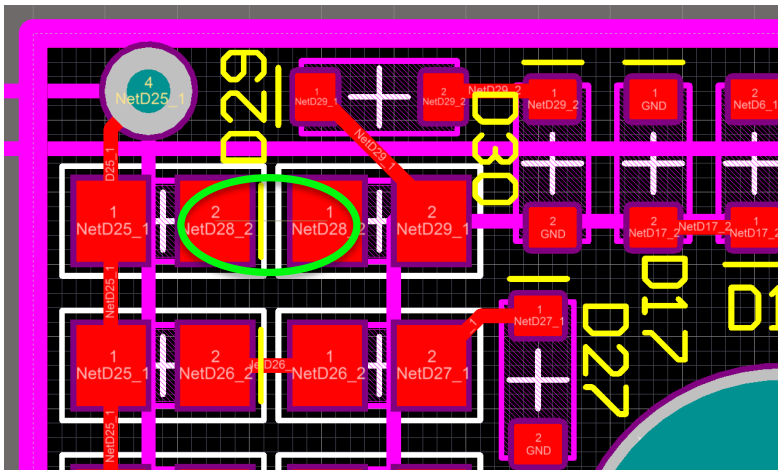

2 Circuit Description

The circuit can be divided into 3 main function blocks:

- Attenuvertion and summing stage for the POL signal (same as the VIM module)
  - which consists of buffers, inverting summers an offset circuit and the ATV stage itself
- The multiplier with the AD633
- The passive VU's on the glitterboard which tap the signals from the mainboard.

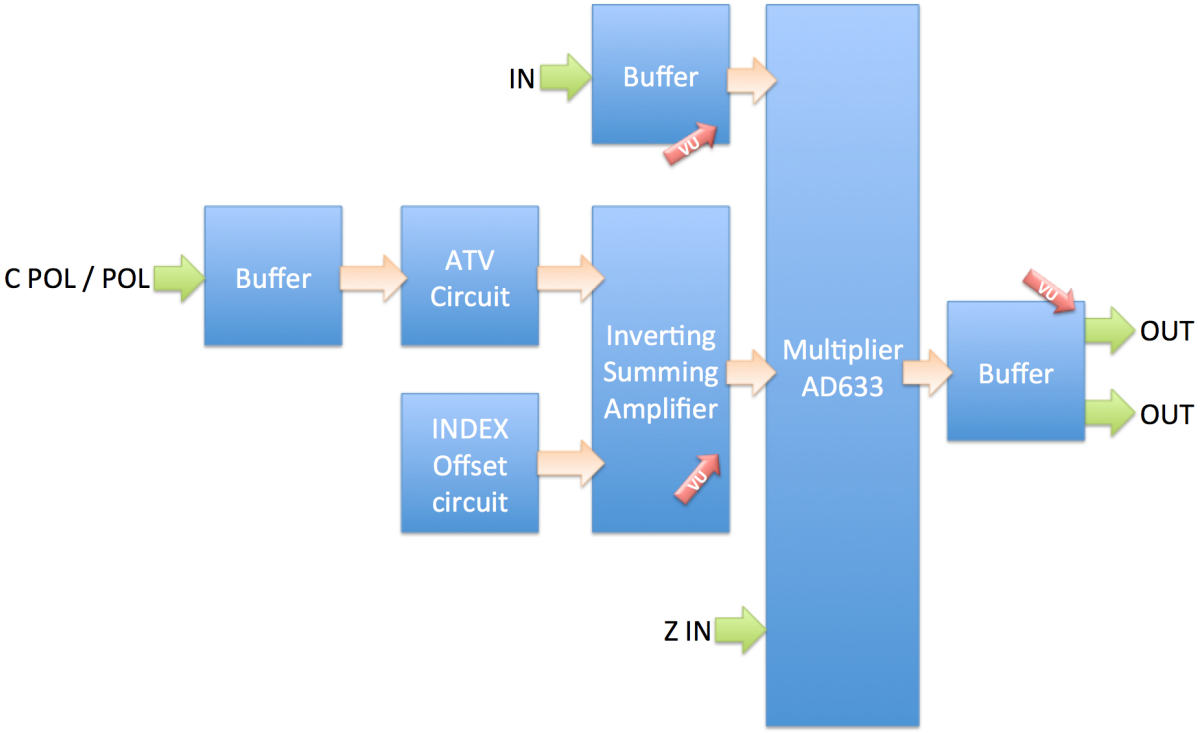

2.1 AD633

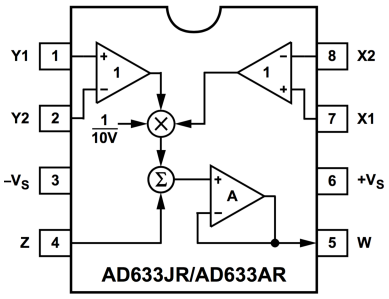

The AD633 is the heart of the polarizer. It has two differential inputs X1&X2 and Y1&Y2. Like operational amplifiers have. The inverting inputs is grounded and only the non inverting input is used in this circuit. These inputs are then internally multiplied, instantly! This is real analog computing.

The resulting product can be summed with and additional voltage from the Z input on Pin 4. This input is also accessible on the Polarizer module.

There is also an internal output buffer which protects the chip from excessive loads. To additionally protect the chip there is another buffer implemented with a spare opamp from the TL074. More details and possible applications can be obtained from the datasheet provided by ANALOG DEVICES. The AD633 is a very versatile and powerfull little analog computer. There are many applications.

Link to the datasheet:

http://www.analog.com/media/en/technical-documentation/data-sheets/AD633.pdf

3 Build Instructions

3.1 Tools

Make sure you have the following tools ready:

- Soldering Iron
- Solder wire, solder wick, a little extra copperwire to mount the glitterboard
- Tweezers
- Side cutting plier (to cutout the PCB and frontpanel)
- Sanding Paper (for smoothing the cut edges of the PCB and frontpanel)

3.2 Build up sequence

To build the kit you preferably start with the small SMT components and then move on to the bigger THT ones. Mount the SMT components from the inside of the board towards the outside.

A possible build up sequence is:

1. Semiconductors (like IC's, Transistors, …)
2. Ceramic Capacitors
3. Resistors
4. Inductors
5. Electrolytic Capacitors
6. Power Connector
7. Jacks
8. LED's
    a. Cutout the frontpanel and “premount” it with loosely tightened knurled nuts to define the length of the LED's legs
    b. Solder and cut the legs
    c. Remove the frontpanel
9. Potentiometers
10. Mechanical
    a. Mount the frontpanel
    b. Tighten the knurled nuts of the jacks
    c. Fasten the knobs of the potentiometers

3.3 Power Connection

Connect the 10-pin ribbon cable like this:

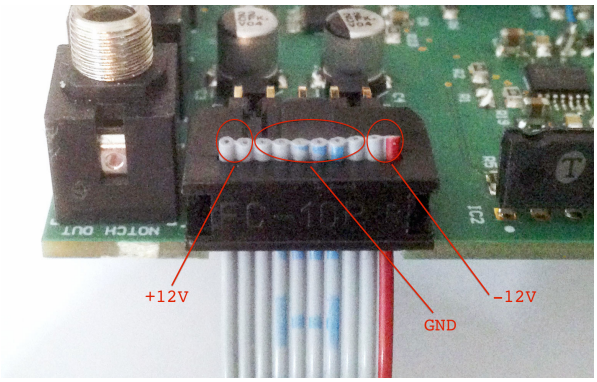

IMPORTANT:

The red wire usually carries the -12V Signal in Eurorack synthesizers. Doublecheck your power rails before powering the module up. **Power inversion will destroy your module.**

4 Calibration / Test Procedure

4.1 Calibration

The POLarizer does not need to be calibrated.

4.2 Test Procedure

- Turn the INDEX knob from left to right. Its value should be correctly displayed by the glitterboard.
- Input some slow signal from an LFO to the IN jack. The signal should be displayed by the glitterboard.
    - depending on the setting of the INDEX potentiometer the output should also be lit accordingly.
- Now connect the same signal to the C POL and POL inputs, and turn the POL CV ATV potentiometer, this should also be accordingly visualized by the glitterboard.

If you have some missing light in the glitterboard: check solderjoints and polarities of the corresponding LED and Zener Diodes.

5 Schematic

5.1 Mainboard

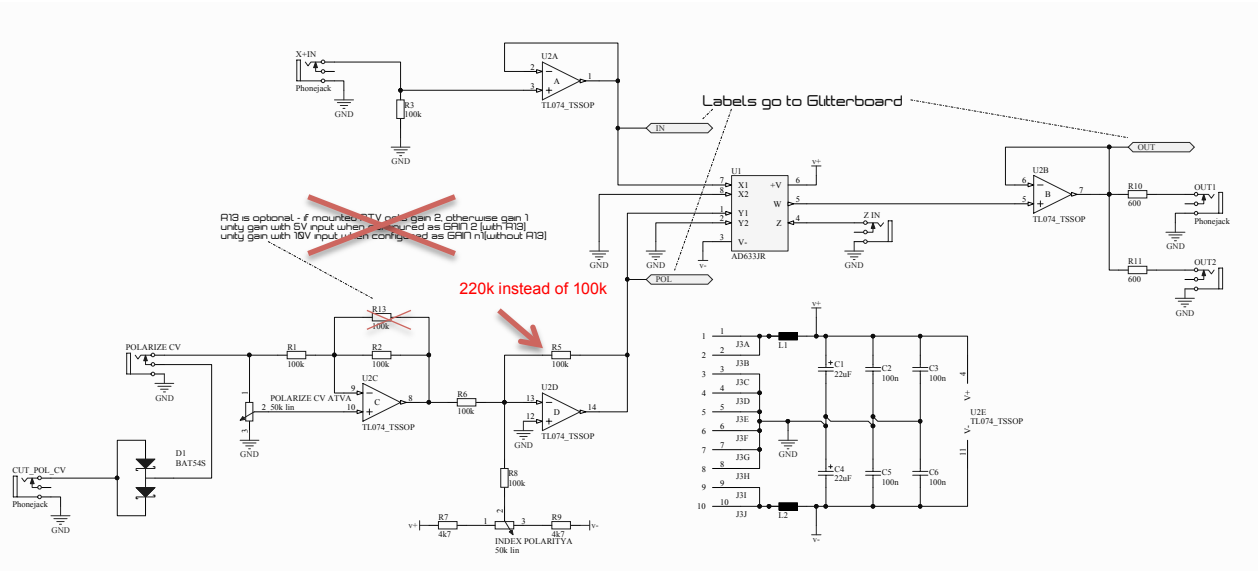

5.2 Glitterboard

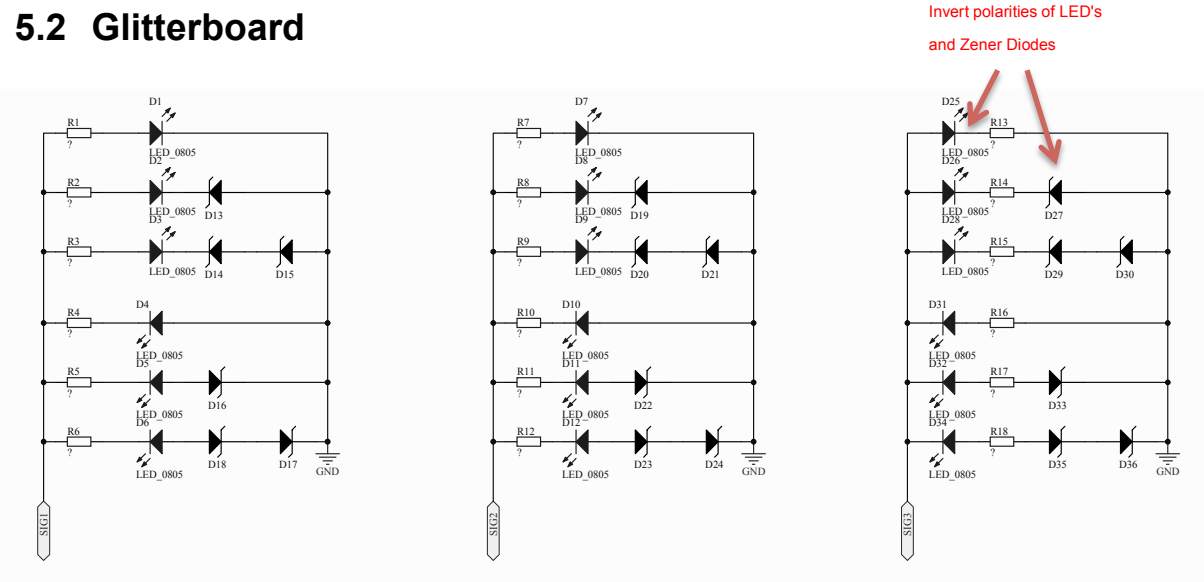

6 BOM

Comment	Designator	Quantity	Value
Resistor	R1, R2, R3, R4, R5, R6, R7, R8, R9, R10, R11, R12, R13, R14, R15, R16, R17, R18	18	1k
2V Zenerdiode	D13, D14, D15, D16, D17, D18, D19, D20, D21, D22, D23, D24, D27, D29, D30, D33, D35, D36	18	
LED_0805 red	D1, D2, D3, D4, D5, D6, D7, D8, D9, D10, D11, D12, D25, D26, D28, D31, D32, D34	18	
TL074_TSSOP	U2	1	
AD633JR	U1	1	
Resistor	R10, R11	2	600
Resistor	R7, R9	2	4k7
Resistor	R1, R2, R3, R5, R6, R8	6	100k
Resistor	R5	1	220k
Inductor PSU 100nH	L1, L2	2	100nH
Pinhead 10Pole	J3	1	
Pot Stereo 50k lin	INDEX POLARITY, POLARIZE CV ATV	2	50k lin
BAT54S	D1	1	
Phonejack	CUT_POL_CV, OUT1, OUT2, POLARIZE CV, X+IN, Z IN	6	
Capacitor 0805	C2, C3, C5, C6	4	100n
CAP PSU	C1, C4	2	22uF

7 Pick & Place information

7.1 Mainboard

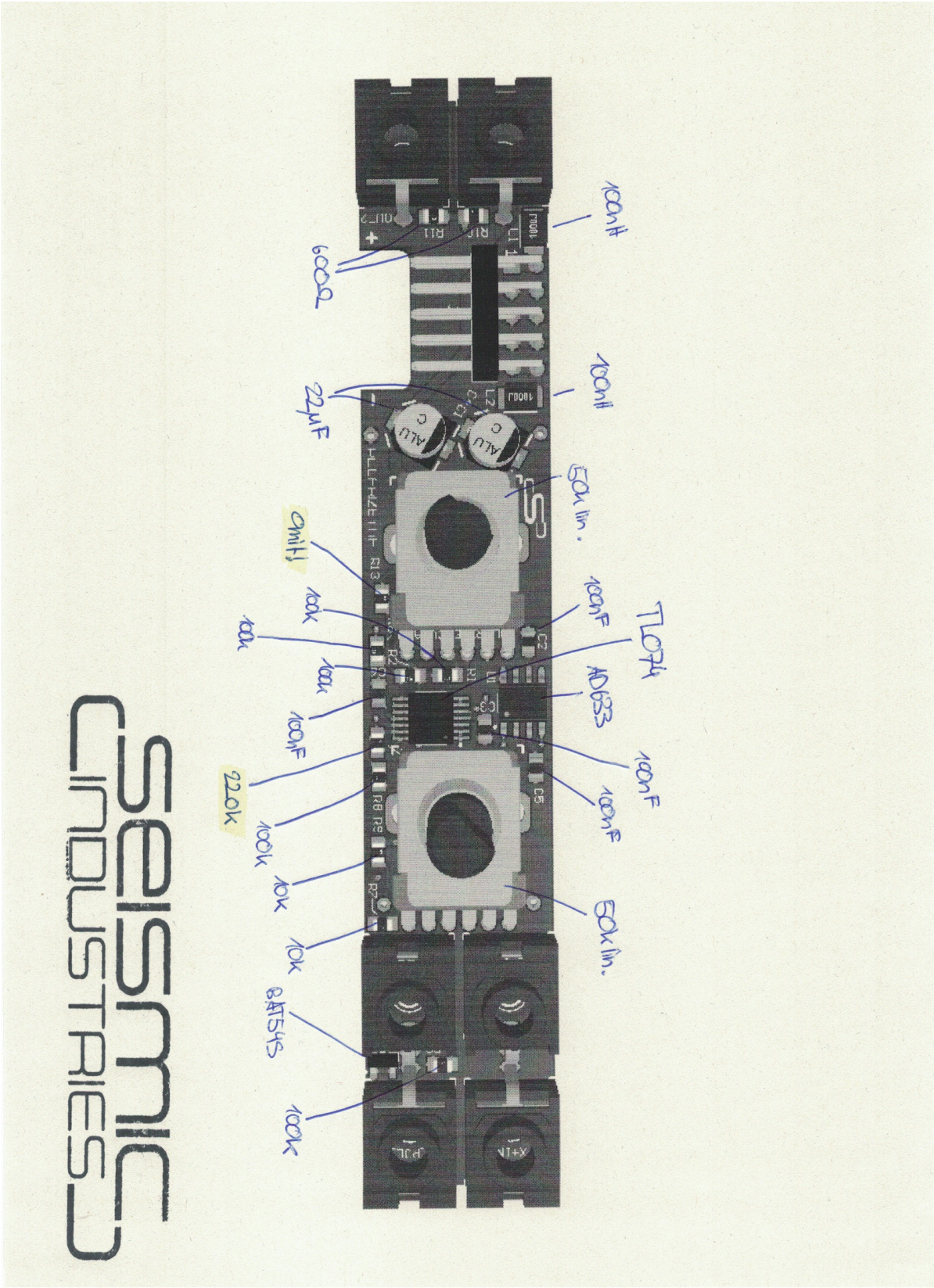

7.2 Glitterboard